Model： Battery Holder for Li-ion 3X18650

№	Параметр / Parameter	Значение (Value)
1	Material	ABS Resin,Black color
2	Terminal	PC Pins
3	Spring	302Stainless Steel Spring Temper,Nickel Plated
4	Temperature	(-40℃to+80℃)
	RoHS Compliant	

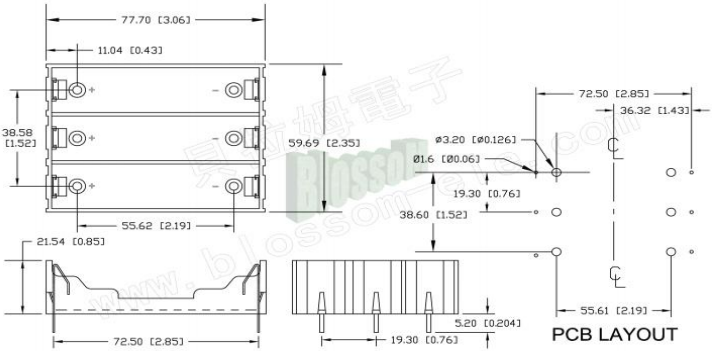

RUICHI